Joachim Kessler

Polarized Electrons

Second Edition

With 157 Figures

Springer-Verlag
Berlin Heidelberg New York Tokyo

1. Introduction

1.1 The Concept of Polarized Electrons

An ensemble of electrons is said to be polarized if the electron spins have a preferential orientation so that there exists a direction for which the two possible spin states are not equally populated. Reasons are given for the interest in polarized electrons.

In early experiments with free electrons the direction of their spins was seldom considered. The spins in electron beams that were produced by conventional methods, such as thermal emission, had arbitrary directions. Whenever the spin direction played a role, one had to average over all spin orientations in order to describe the experiments properly.

Only in recent years has it been found possible to produce electron beams in which the spins have a preferential orientation. They are called polarized electron beams in analogy to polarized light in which it is the field vectors that have a preferred orientation. To put it more precisely: An electron beam (or any other electron ensemble) is said to be polarized if there exists a direction for which the two possible spin states are not equally populated.

If all spins have the same direction one has the extreme case of a totally polarized ensemble of electrons (Fig. 1.1). If not all, but only a majority of the spins has the same direction, the ensemble is called partially polarized.

There are many reasons for the interest in polarized electrons. One essential reason is that in physical investigations one endeavors to define as exactly as possible the initial and/or final states of the systems being considered. Let us illustrate this statement with two examples. It is important in many electron-scattering experiments to be able to select electrons of as uniform energy as possible. Otherwise one would have to carry out complicated averaging in order to understand the results, and many experiments (e.g., observing the excitation of particular energy states of atoms) could not even be performed. This also

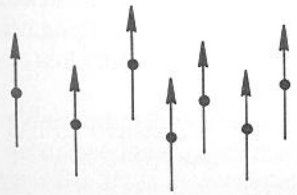

Fig. 1.1. Ensemble of totally polarized electrons

applies to momentum: Often one endeavors to have electrons in the form of a well-defined beam, that is, a beam in which the directions of the momenta of the individual electrons are as uniform as possible. A swarm of electrons with arbitrary momentum directions would, for example, be unsuitable for bombarding a target. For quite analogous reasons, it is important in the investigation of the large number of spin-dependent processes that occur in physics to have electrons available in well-defined spin states. Thus one is not obliged to average over all possibilities that may arise from different spin directions, thereby losing valuable information. One can rather investigate the individual possibilities separately.

This somewhat general statement will be substantiated in later chapters. Numerous other reasons for investigations with polarized electrons will then become clear, such as the possibility of obtaining a better understanding of the structure of magnetic substances or of atomic interactions, or the goal of determining precisely the magnetic moment of the electron.

1.2 Why Conventional Polarization Filters Do Not Work with Electrons

Conventional spin filters, the prototype of which is the Stern-Gerlach magnet, do not work with free electrons. This is because a Lorentz force which does not appear with neutral atoms arises in the Stern-Gerlach magnet. This, combined with the uncertainty principle, prevents the separation of spin-up and spin-down electrons.

When Malus in 1808 looked through a calcite crystal at the light reflected from a windowpane of the Palais Luxembourg, he detected the polarization of light. When Stern and Gerlach in 1921 sent an atomic beam through an inhomogeneous magnetic field they detected the polarization of atoms. Numerous exciting experiments with polarized light or polarized atoms have been made since these early discoveries. However, experiments of comparable quality with polarized electrons have been possible only in the past two decades.

This is not accidental; the reason can be easily given. Polarized light can be produced from unpolarized light by sending it through a polarizer which eliminates one of the two basic directions of polarization. One therefore loses a factor of 2 in intensity. Similarly, a polarized atomic beam can be produced by sending an unpolarized atomic beam through a spin filter. If, for example, an alkali atomic beam passes through a Stern-Gerlach magnet, it splits into two beams with opposite spin directions of the valence electrons. One can eliminate one of these beams and thus again have a polarized beam with an intensity loss of a factor of 2.

This procedure does not work with electrons. It is fundamentally impossible to polarize free electrons with the use of a Stern-Gerlach experiment as can be seen in the following [1.1].

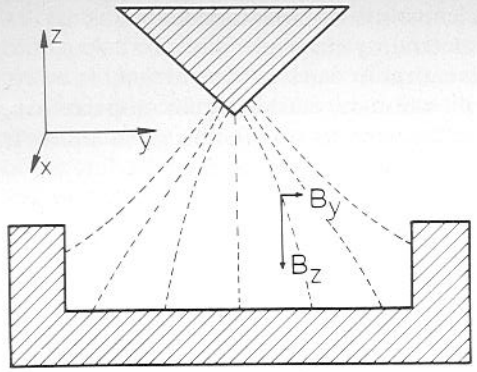

Fig. 1.2. Stern-Gerlach experiment with free electrons

In Fig. 1.2 the electron beam passes through the middle of the magnetic field in a direction perpendicular to the plane of the diagram (velocity $v = v_x$). The spins align parallel or antiparallel to the magnetic field and the electrons experience a deflecting force in the inhomogeneous field. In the plane of symmetry the force that tends to split the beam is

$$F = \pm \mu \frac{\partial B_z}{\partial z}, \tag{1.1}$$

where μ is the magnetic moment of the electrons. In addition, the electrons experience a Lorentz force due to their electric charge. Its component in the y direction, caused by the magnetic field component B_z, produces a right-hand shift of the image that could be detected by a photographic plate. As the electron beam has a certain width, it is also affected by the field component B_y which exists outside the symmetry plane. The component of the Lorentz force $F_L = (e/c) v_x B_y$, caused by B_y, deflects the electrons upwards if they are to the right of the symmetry plane and downwards if they are to the left of it. This causes a tilting of the traces on the photographic plate as is shown schematically in Fig. 1.3.

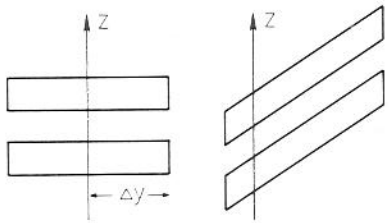

Fig. 1.3. Deflection of uncharged (*left-hand side*) and charged (*right-hand side*) particles with spin 1/2 in Stern-Gerlach field

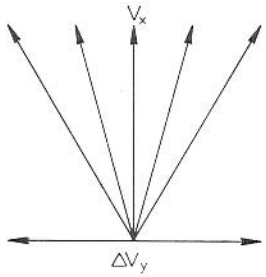

Fig. 1.4. Transverse beam spread

Even in "thought" (Gedanken) experiments we must not consider an infinitely narrow beam, since the uncertainty principle must be taken into account, i.e., $\Delta y \cdot m\Delta v_y \approx h$. Because we want to work with a reasonable beam, the uncertainty of the velocity in the y direction Δv_y must be small compared to v_x (see Fig. 1.4). From this, together with the uncertainty relation given above, it follows that $h/m\Delta y \ll v_x$, or with $\lambda = h/mv_x$ (de Broglie wavelength)

$$\lambda \ll \Delta y; \tag{1.2}$$

correspondingly one has $\lambda \ll \Delta z$.

Nevertheless, to be able to draw Fig. 1.5 clearly, we assume for now that we can have a beam whose spread in the z direction, in which we hope to obtain the splitting, is smaller than the de Broglie wavelength. Let us consider two points A′ and B for which the y coordinate differs by λ. This is always possible since the beam width Δy is much greater than λ. As λ is small compared to the macroscopic dimensions of the field, the Taylor expansion

$$B_y(y+\lambda) = B_y(y) + \lambda \frac{\partial B_y}{\partial y}(y) \tag{1.3}$$

is, to a good approximation, valid. This means that the Lorentz force experienced by the electrons arriving at A′ has always been larger by about $\Delta F_L = (e/c)v_x\lambda(\partial B_y/\partial y)$ than that experienced by the electrons arriving at B.

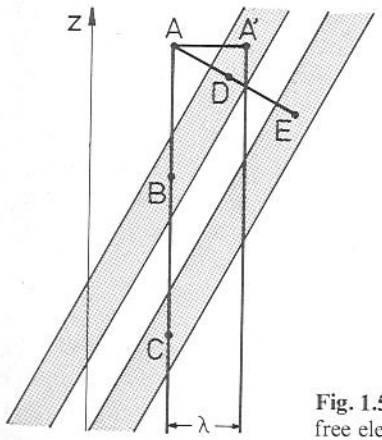

Fig. 1.5. Impossibility of the Stern-Gerlach experiment with free electrons

Thus A′ is higher than B by an amount AB shown in Fig. 1.5. We can easily compare this distance with the splitting BC caused by the force F from (1.1). Since AB and BC are proportional to the respective forces applied, one obtains

$$\frac{\mathrm{AB}}{\mathrm{BC}} = \frac{\Delta F_L}{2F} = \frac{(e/c)v_x\lambda(\partial B_z/\partial z)}{2(e\hbar/2mc)(\partial B_z/\partial z)} = \frac{2\pi\lambda}{\lambda} = 2\pi, \tag{1.4}$$

∂By/∂y

where use has been made of div $\boldsymbol{B} = 0$, or $\partial B_y/\partial y = -\partial B_z/\partial z$. This means that the tilting of the traces is very large: AB is much larger than the splitting BC, although A′A is as small as λ. This has the following consequences:

If AE is the perpendicular from A to the traces, then, because AB > BC, AD is greater than DE. On the other hand, AD is smaller than the hypotenuse $\mathrm{AA}' = \lambda$ of the right triangle ADA′; hence DE, the distance between the centers of the traces, is such that $\mathrm{DE} < \mathrm{AD} < \lambda$. This means that this distance is smaller than the width of either of the traces, which we have shown is considerably larger than λ in every direction. Consequently, no splitting into traces with opposing spin directions can be observed. The uncertainty principle, together with the Lorentz force, prevents spin-up and spin-down electrons from being separated by a macroscopic field of the Stern-Gerlach type. The most one could expect would be a slight imbalance of the spin directions at the edges of the beam.

Attempts have frequently been made to disprove the above argument, originating from Bohr and Pauli, that a Stern-Gerlach type experiment is impossible with electrons (see [1.2]). Such attempts have the same challenge as "thought" experiments for constructing perpetual-motion machines. However, all suggestions for modifying the experiment so that it would work have failed. We shall, however, see at the end of the book that it is not, in principle, impossible to obtain different populations of spin-up and spin-down states of free electrons with the aid of macroscopic fields. Selection of spin states may, for instance, be performed by trapping electrons in suitable inhomogeneous magnetic fields (cf. end of Sect. 8.3).

Since the most direct method, the Stern-Gerlach filter, fails, one had to find other ways of producing polarized free electrons. Scattering of unpolarized electrons by heavy atoms, for example, yields highly polarized electrons. In this way, however, one does not lose only a factor of 2, as with a conventional polarization filter, but a factor of 10^4 to 10^7, depending on how high a polarization one wants. As we shall see later, there are methods other than scattering, but they have in common the fact that they yield only moderate intensities. Nobody has yet found a spin filter for electrons that reduces the intensity by just a factor of 2.

For a polarization experiment one also needs an analyzer for the polarization. Here we have the same situation. If the transmission axis of an optical analyzer is parallel to the polarization, a totally polarized light beam passes through the analyzer without loss of intensity. Similarly, if one uses a spin filter of the Stern-Gerlach type as an analyzer, a totally polarized atomic beam passes through without appreciable loss of intensity, if the direction of its polarization is parallel to the analyzing direction. With electrons, however, one cannot use such a spin filter as an analyzer for the same reason one cannot use it as a polarizer. One must use some spin-dependent collision process, usually electron scattering, where one again loses several orders of magnitude in intensity.

Since one needs a polarizer as well as an analyzer for a polarization experiment, the two factors together easily make an intensity reduction of a factor of 10^6 or more in an electron-polarization experiment. If we compare this

to the factor of 2 for a light- or atom-polarization experiment (under ideal conditions), we see why electron-polarization studies became feasible only in recent years: Sufficiently advanced experimental techniques had to be developed before this field was accessible.

The fact that conventional polarization filters do not work with electrons does not mean that it is absolutely impossible to find effective electron polarization filters. As will be discussed in Sect. 7.1.2 there are interesting developments which show that it is worthwhile to search for "unconventional" electron polarization filters of high efficiency.

Before we can discuss quantitatively the processes in which electron polarization plays a role, we must look at the possibilities of describing polarized electrons mathematically.

2. Description of Polarized Electrons

2.1 A Few Results from Elementary Quantum Mechanics

The formal description of the spin of free electrons is summarized.

The following facts can be drawn from textbooks on quantum mechanics: The observable "spin" is represented by the operator $\boldsymbol{s}$ which satisfies the commutation relations characteristic of angular momenta:

$$s_x s_y - s_y s_x = \mathrm{i}\hbar s_z \quad \text{(etc. by cyclic permutation).} \tag{2.1}$$

If one separates out the factor $\hbar/2$ by the definition $\boldsymbol{s} = (\hbar/2)\boldsymbol{\sigma}$, one obtains from the above commutation relations, with the additional condition that σ_z is diagonal, the Pauli matrices

$$\sigma_x = \begin{pmatrix} 0 & 1 \\ 1 & 0 \end{pmatrix}, \quad \sigma_y = \begin{pmatrix} 0 & -\mathrm{i} \\ \mathrm{i} & 0 \end{pmatrix}, \quad \sigma_z = \begin{pmatrix} 1 & 0 \\ 0 & -1 \end{pmatrix}. \tag{2.2}$$

These operators receive their meaning from their application to the two-component wave functions $\begin{pmatrix} a_1 \\ a_2 \end{pmatrix}$ with whose help the two possible orientations of the electron spin can be described. For example, one has the eigenvalue equations

$$\sigma_z \begin{pmatrix} 1 \\ 0 \end{pmatrix} = \begin{pmatrix} 1 & 0 \\ 0 & -1 \end{pmatrix} \begin{pmatrix} 1 \\ 0 \end{pmatrix} = 1 \cdot \begin{pmatrix} 1 \\ 0 \end{pmatrix}, \quad \sigma_z \begin{pmatrix} 0 \\ 1 \end{pmatrix} = \begin{pmatrix} 1 & 0 \\ 0 & -1 \end{pmatrix} \begin{pmatrix} 0 \\ 1 \end{pmatrix} = -1 \cdot \begin{pmatrix} 0 \\ 1 \end{pmatrix} \tag{2.3}$$

which mean that $\begin{pmatrix} 1 \\ 0 \end{pmatrix}$ is an eigenfunction of σ_z with the eigenvalue $+1$ (or $+\hbar/2$ of s_z) and $\begin{pmatrix} 0 \\ 1 \end{pmatrix}$ belongs to the eigenvalue -1.

We can use these two states as a basis for representing the general state

$$\chi = \begin{pmatrix} a_1 \\ a_2 \end{pmatrix}$$

as a linear superposition